UNTHA

shredding technology

The reliable brand!

RS

SERIES

RS30, RS40

RELIABILITY FOR MANY YEARS

The reliable and sturdy RS30 and RS40 shredders were developed for a wide range of applications and have been proving their worth for many decades now. The machines can be operated as stand-alone solutions or integrated into complex installations. Thanks to their very compact design, they are easy to integrate.

They stand out with their high uptime and process reliability, their functional design and their unrivalled throughput.

For more information please refer to the brochure “Individual Shredding Solutions”

FUNCTION AND DESIGN

After the material to be shredded has been drawn into the internal (main) cutting system (1), it is pre-shredded as well as post-shredded in a single shredding operation. If the shredded material does not immediately through the screen (2), it is taken up by the teeth of the external (secondary) cutting system (3) and moved back up and fed into the shredding process again. The screen determines the size
of the final fraction.

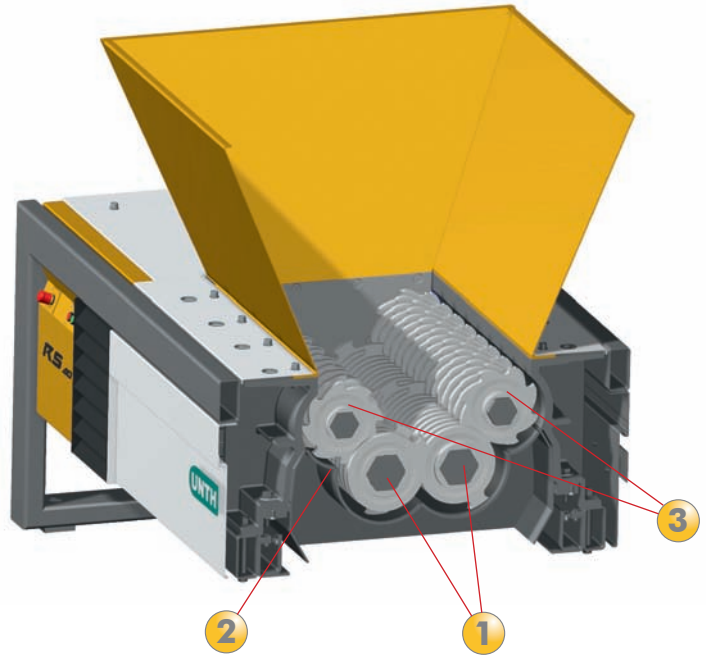

A SELECTION OF IMPLEMENTED APPLICATIONS

• Files and folders • Dashboards • Interior trim • Bank notes • Organic waste • CDs • Plastic film • Green waste • Waste rubber • Wooden waste• Cardboard packaging • Cardboard tubes • Plastic barrels • Plastic packaging • Leather • Metal chips • Oil filters • Paper • Plastic bottles • Production waste • Foamed boards • Punching scrap • Bumpers • Tetra packs • Textiles • Transformer coils • Packaging material • etc.

QUALITY FEATURES

High uptime

- Integrated electronic cutout when foreign material is detected
- Resistant to foreign material thanks to the slow speed of the cutting shafts
- Integrated central lubrication system (A)
- Maintenance-free mechanical seals (B) prevent dirt and dust from entering into gears and bearings
- Electric oil level monitoring
- Easy to replace wear plates (C) in the cutting chamber
- Relatively fail-safe thanks to simple structure (no hydraulics, couplings, etc.)
- All cutting disks with double collar (D) for a better transmission of strong cutting forces

High process reliability

- The screen quick-change system (E) makes it possible to exchange the perforated screen without removing connected conveying systems
- Reliable and sturdy drive (F) due to two separate motors and rugged spur gear
- Innovative screen system (G) with a bevelled design for quick removal
- Constantly homogenous final fraction
- Pre- and post-shredding in one step
- Input material is pulled in independently; no ram device required

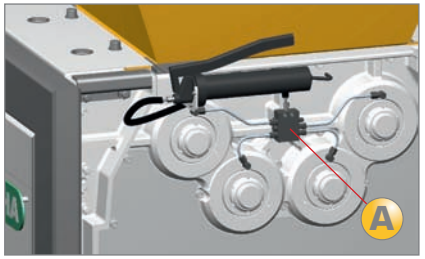

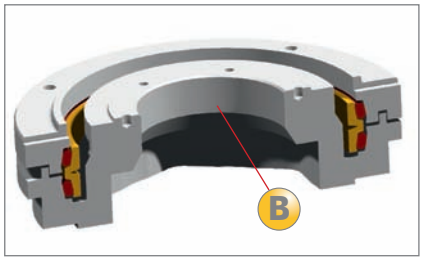

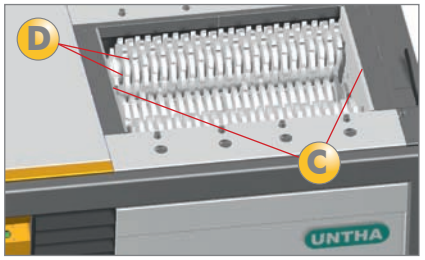

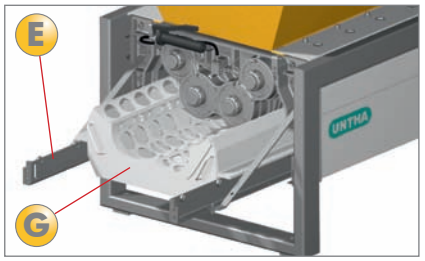

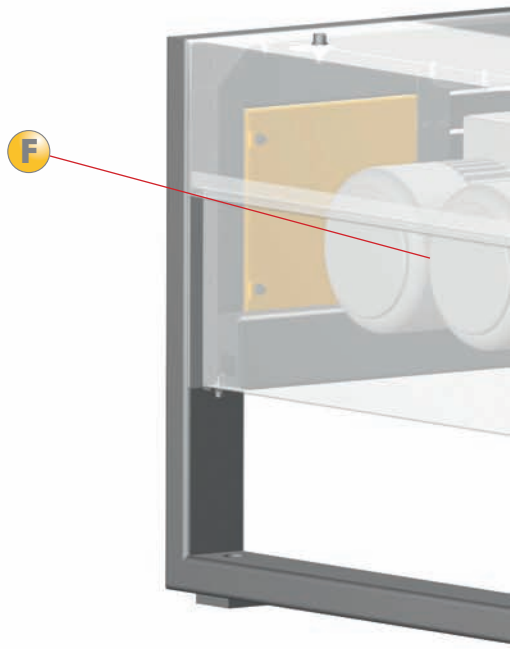

Functional design

- Operation (H) directly at the machine with integrated EMERGENCY STOP
- All components are protected from dust and dirt due to novel design
- Steel frame (I) made from warp-resistant and solid special section tubes
- Easy to integrate in complex installations thanks to compact design
- Defined interfaces for 100% safe seal to downstream components
- Can be charged from all sides

Unrivalled in throughput

- High throughput thanks to very large screen surface and tailored cutter design
- High torques thanks to slowly rotating cutting shafts
- High availability thanks to little downtime

Low noise and dust development

- Thanks to slow rotation of cutting shafts

RS SERIES

Four-shaft shredding system

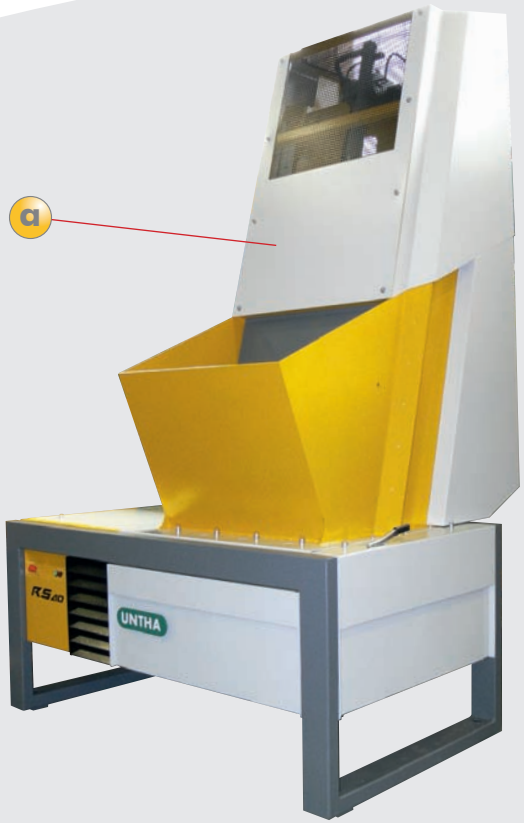

TECHNICAL DATA		RS30	RS40
Driving power	kW	11 / 15 / 22	30 / 37 / 44
Charging hole	mm	450 x 600	750 x 700 / 1,000 x 700
No. of cutting shafts		4	4
Speed main shafts	rpm	23	24
Speed secondary shafts	rpm	34	32
Ø Perforated screen	mm	15 - 40	15 - 40
Weight	kg	ca. 1,300	ca. 2,100 / 2,800

All dimensions in mm.

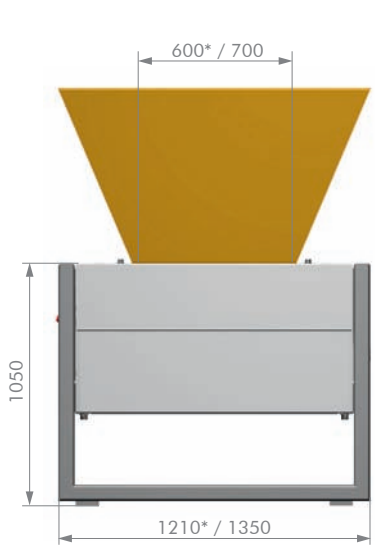

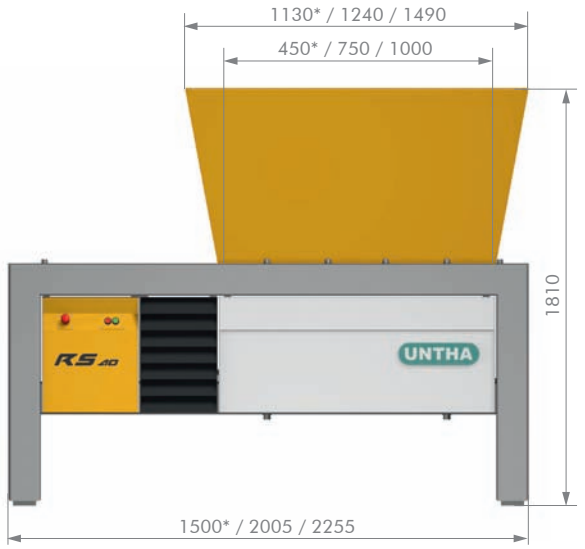

*) Valid for RS30

Options

- Hydraulic ram device (a) for better intake of materials with small specific density
- Frequency inverter for infinite adjustment of speed to the input material to be shredded and for reduction of start-up peaks
- Discharge screws for efficient discharge of output material
- Automatic central lubrication system
- "UNTHA Carefree package"

40 years of expertise

More than 8,000 shredders in daily operation!

UNTHA

shredding technology

The reliable brand!

UNTHA shredding technology

Moldanstraße 141
A-5431 Kuchl / Salzburg, Austria
Tel +43 6244 7016 0, Fax +43 6244 7016 1
info@untha.com

www.untha.com

Authorised partner of UNTHA

All revisions reserved. Subject to setting and printing errors.
All illustrations are representative and may deviate from the actual product.
© 08/10 UNTHA shredding technology